FIRE PROTECTION SCOPE - NEW SYSTEM

THE CONTRACTOR SHALL PROVIDE A RISER AND FULL DISTRIBUTION PIPING, SPRINKLER HEADS, AND ALL OTHER COMPONENTS TO PROVIDE A COMPLETE SYSTEM. PROVIDE SPRINKLER HEADS AND PIPING TO MEET THE CEILING TYPE AND HAZARD CLASSIFICATION (DESIGN CRITERIA). THE SYSTEM SHALL BE HYDRAULICLY DESIGNED. SUBMIT SHOP DRAWINGS INCLUDING HYDRAULIC CALCULATIONS DETAILING THE SYSTEM DESIGN AND PERFORMANCE.

SPRINKLER CONTRACTOR SHALL OBTAIN A NEW FLOW TEST APON AWARDING OF THE PROJECT TO THE SPRINKLER CONTRACTOR. THE SPRINKLER SYSTEM SHALL BE DESIGNED TO WORK WITHIN THE PRESSURE AND FLOW LIMITS OF THIS FLOW TEST WITHOUT THE USE OF A FIRE PUMP UNLESS A FIRE PUMP HAS BEEN INDICTED ON THIS SET OF DRAWINGS. IF THE SYSTEM CANNOT BE MADE TO WORK WITHOUT THE USE OF A FIRE PUMP, THE CONTRACTOR SHALL PROVIDE THE ENGINEER A WRITTEN NOTIFICATION OF THE NEED FOR A FIRE PUMP. THIS NOTIFICATION SHALL INCLUDE HYDRAULIC CALCULATIONS FOR THE SYSTEM SHOWING THAT THE AVAILABLE PRESSURE IS INADEQUATE.

FOLLOW THE SPECIFICATIONS, NOTES, AND SCHEDULES IN THIS DRAWING SET FOR ADDITIONAL REQUIREMENTS.

NOTE:
1. THE FIRE SPRINKLER CONTRACTOR SHALL PROVIDE AND INSTALL A BACKFLOW PREVENTER (LISTED) AT A LOCATION INDICATED BY THE PLUMBING AND/OR CIVIL DRAWINGS. BFP SHALL BE SIZED TO MINIMIZE PRESSURE DROP. IF THE BACKFLOW PREVENTOR IS LOCATED OUTSIDE OF THE SPRINKLER CONTRACTOR'S SCOPE OF WORK (I.E. IS IN A VAULT AND PART OF SITE UTILITY WORK), THE SPRINKLER CONTRACTOR, THE INSTALLING CONTRACTOR, AND THE GENERAL CONTRACTOR SHALL HAVE A FACE TO FACE MEETING TO COORDINATE THE NEEDS OF THE SPRINKLER DESIGN AND CHARACTERISTICS OF THE BACKFLOW PREVENTOR PRIOR TO THE BFP BEING ORDERED. RECORDS OF THIS MEETING, INCLUDING MEETING MINUTES AND ATTENDEES, SHALL BE MADE AVAILABLE TO THE OWNER AND THE DESIGN TEAM UPON REQUEST. THE BACKFLOW PREVENTOR MUST COMPLY WITH THE CHARACTERISTICS REQUIRED OF THE SPRINKLER DESIGN AND SHALL MATCH THE CHARACTERISTICS USED IN THE SPRINKLER HYDRAULIC CALCULATIONS.
2. HYDRAULIC CALCULATIONS SHALL TAKE INTO ACCOUNT THE BFP AND EXTERIOR PIPING FROM THE FLOW TEST HYDRANT.
3. CONTRACTOR SHALL CONFIRM THAT WATER FLOW AND PRESSURE IS ADEQUATE FOR THE DESIGN AND IF NOT NOTIFY THE ARCHITECT AND ENGINEER PRIOR TO INSTALLING OR ORDERING SYSTEM COMPONENTS.
4. ALL PIPING ABOVE GRADE SHALL BE PROPERLY SUPPORTED FROM THE BUILDING STRUCTURE AND SHALL NOT REST ON CEILING TILES OR BE SUPPORTED FROM CEILING TILES.
5. FIRE PROTECTION PIPING IS NOT TO BE INSTALLED IN ELECTRICAL ROOMS OR CLOSETS, OR TELEPHONE ROOMS EXCEPT THAT PIPING SERVING THAT SPECIFIC ROOM.
6. LOCATE ALL SECTIONAL OR MAIN CONTROL VALVES WITHIN 1'-0" FROM ACCESS PANELS, CEILING TILES, OR OTHER POINT OF ACCESS.
7. PROVIDE A MANUFACTURED EXPANSION DEVICE OR FABRICATED EXPANSION LOOP ON ALL PIPING SYSTEMS CROSSING BUILDING EXPANSION JOINTS.
8. CONTRACTOR SHALL COORDINATE ELECTRICAL CHARACTERISTICS AND REQUIREMENTS OF ALL FIRE PROTECTION EQUIPMENT WITH THE ELECTRICAL DRAWINGS AND THE ELECTRICAL CONTRACTOR, AND SHALL FURNISH EQUIPMENT WIRED FOR THE VOLTAGES SHOWN THEREIN.
9. THE FIRE PROTECTION CONTRACTOR, ELECTRICAL CONTRACTOR, HVAC CONTRACTOR, PLUMBING CONTRACTOR, GENERAL CONTRACTOR, AND ANY OTHER CONTRACTOR THAT MAY HAVE INSTALLATION WORK TO PERFORM WHERE SPRINKLER PIPING IS TO BE INSTALLED, SHALL HAVE A FACE TO FACE MEETING PRIOR TO BEGINNING CONSTRUCTION TO COORDINATE THE INSTALLATION NEEDS OF THE SPRINKLER SYSTEM WITH OTHER TRADES FOR THE PURPOSE OF IDENTIFYING AND AVOIDING INSTALLATION CONFLICTS DURING CONSTRUCTION. RECORDS OF THIS MEETING, INCLUDING MEETING MINUTES AND A LIST OF ATTENDEES, SHALL BE MADE AVAILABLE TO THE OWNER AND THE DESIGN TEAM UPON REQUEST.
10. ALL PIPE PENETRATIONS OF FIRE AND/OR SMOKE-RATED ASSEMBLIES SHALL BE FIRE-STOPPED AS REQUIRED TO RESTORE ASSEMBLY TO ORIGINAL INTEGRITY. FIRE BARRIER PRODUCTS SHALL BE AS MANUFACTURED BY 3M COMPANY, CP25 CAULK, CS195 COMPOSITE PANEL, FS195 WRAP/STRIP, OR PSS 7900 SERIES SYSTEMS AS RECOMMENDED BY MANUFACTURER FOR PARTICULAR APPLICATION, OR EQUIVALENT SYSTEM AS APPROVED BY LOCAL CODE OFFICIALS.

FIRE PROTECTION SCOPE - ALTERED EXISTING SYSTEM

THE CONTRACTOR SHALL MODIFY THE EXISTING SPRINKLER SYSTEM TO CONFORM TO THE SPRINKLER REQUIREMENTS OF NFPA 13 FOR THE NEW ARCHITECTURAL PLANS. PROVIDE SPRINKLER HEADS AND PIPING TO MEET THE CEILING TYPE AND HAZARD CLASSIFICATION (DESIGN CRITERIA). THE SYSTEM SHALL BE HYDRAULICLY DESIGNED. SUBMIT SHOP DRAWINGS INCLUDING HYDRAULIC CALCULATIONS DETAILING THE SYSTEM DESIGN AND PERFORMANCE.

SPRINKLER CONTRACTOR SHALL DESIGN THE SPRINKLER SYSTEM TO WORK WITHIN THE PRESSURE AND FLOW PRESENT AT THE EXISTING SITE.

FOLLOW THE SPECS ON THIS SHEET FOR SYSTEM REQUIREMENTS.

NOTE:
1. THE FIRE CONTRACTOR SHALL VERIFY THAT THE EXISTING FIRE PROTECTION SYSTEM INCLUDES A FIRE RISER COMPLIANT WITH NFPA 13 AND THAT A BFP HAS BEEN PROVIDED ON THE WATER LINE SERVING THE SYSTEM. CONTRACTOR SHALL CONFIRM THAT WATER FLOW/PRESSURE IS ADEQUATE FOR THE DESIGN WHEN TAKING INTO ACCOUNT THE EXISTING BFP AND FIRE RISER COMPONENTS AND IF NOT NOTIFY THE ARCHITECT/ENGINEER PRIOR TO INSTALLING/ORDERING SYSTEM COMPONENTS.

DRY PIPE SYSTEM NOTES

PROVIDE A DRY PIPE SYSTEM IN COMPLIANCE WITH NFPA 13 FOR THE AREAS INDICATED IN THE DESIGN CRITERIA NOTED ON THIS SHEET. SYSTEM SHALL BE HYDRAULICALLY DESIGNED AND ALL COMPONENTS SHALL BE LISTED FOR FIRE PROTECTION SERVICE.

DRY PIPE VALVE SHALL BE ACCESSIBLE AND IN THE HEATED RISER ROOM.

SYSTEM SHALL HAVE A MAXIMUM 750 GALLON SYSTEM CAPACITY ON ONE DRY VALVE UNLESS DESIGNED TO HAVE WATER FLOW WITHIN 60 SECONDS TO THE TEST CONNECTION. BRANCH LINES SHALL BE PITCHED 1/2" PER 10 FT BACK TO MAIN, AND THE MAIN LINE SHALL BE PITCHED MINIMUM OF 1/4" PER 10 FT BACK TO THE SOURCE. ALL WATER SHALL BE CAPABLE OF DRAINING FROM SYSTEM. SYSTEM SHALL BE TESTED AND COMPLETELY DRIED OUT PRIOR TO PLACING IN SERVICE.

SYSTEM SHALL HAVE AN AUTOMATIC AIR COMPRESSOR MOUNTED ON THE PIPE, WITH VIBRATION ISOLATION, AND THE SYSTEM SHALL BE SUPPLIED WITH PRESSURIZED AIR (NOT NITROGEN GAS). COMPRESSOR SHALL BE CAPABLE OF FILLING SYSTEM WITHIN 30 MINUTES. COMPRESSOR SHALL BE SINGLE STAGE OIL FREE TYPE, AIR COOLED, ELECTRIC MOTOR DRIVEN EQUIPPED WITH A CHECK VALVE, PRESSURE SWITCH, PRESSURE MAINTENANCE DEVICE, AND A SAFETY RELIEF VALVE SET AT 10 PSI IN EXCESS OF THE SYSTEM OPERATING PRESSURE WHICH SHALL BE 20 PSI GREATER THAN THE DRY VALVE TRIP PRESSURE BASED ON THE HIGHEST NORMAL WATER PRESSURE. PROVIDE ALL GAUGES AND ACCESSORIES IN ADDITION TO THOSE ITEMS MENTIONED HERE FOR A COMPLETE SYSTEM.

THE CONNECTION PIPE FROM THE AIR COMPRESSOR SHALL BE 1/2" IN DIAMETER AND SHALL ENTER THE SYSTEM ABOVE THE PRIMING WATER LEVEL OF THE DRY PIPE VALVE.

EACH DRY PIPE VALVE SHALL BE EQUIPPED WITH A LOCAL ALARM DEVICE CONSISTING OF A HORN OR BELL, SILENCE SWITCH, LOW ALARM LIGHT, AND TROUBLE LIGHT. THE ALARM DEVICE SHALL BE ACTIVATED BY A LOW PRESSURE SWITCH. THE TROUBLE LIGHT SHALL ILLUMINATE UPON OPERATION OF THE SILENCE SWITCH AND SHALL BE DEENERGIZED UPON RETURN OF THE SYSTEM TO ITS NORMAL POSITION. PRESSURE SWITCH SHALL BE ADJUSTABLE AND SHALL BE CAPABLE OF BEING WIRED FOR A NORMALLY OPEN OR NORMALLY CLOSED CIRCUIT.

PIPE AND COMPONENTS SHALL BE AS INDICATED IN THE FIRE PROTECTION SPECS LISTED ON THIS SHEET.

HANGARS SHALL BE INSTALLED WHERE ARM OVERS EXCEED 12 INCHES.

PROVIDE AN AIR PRESSURE TEST IN ADDITION TO THE REQUIRED HYDROSTATIC TEST. AIR PRESSURE TEST SHALL BE PERFORMED.

FIRE PROTECTION SYSTEMS - UNHEATED SPACES

THERE ARE SEVERAL SPACES ON THIS PROJECT THAT ARE LOCATED IN AREAS WHERE FREEZING CONDITIONS MAY OCCUR. THE CONTRACTOR SHALL PROVIDE A SPRINKLER SYSTEM IN THESE AREAS THAT WILL BE PROTECTED FROM FREEZING TEMPERATURES. THE CONTRACTOR SHALL ALSO PROTECT ANY SUPPLY PIPING THAT IS ROUTED THROUGH THESE AREAS FROM FREEZING. PROTECTION MAY BE IN THE FORM OF DRY SYSTEMS, DRY TYPE HEADS, HEAT TRACE, ANTIFREEZE SOLUTIONS, OR A COMBINATION OF THESE SYSTEMS AS APPROVED BY THE LOCAL AUTHORITY.

FIRE PROTECTION PIPE SHALL NOT BE RUN THROUGH AN UNHEATED SPACE WHERE AN ALTERNATE ROUTE THROUGH A HEATED SPACE EXISTS.

AT THE TIME OF DESIGN, THE SPACES LISTED BELOW ARE KNOWN TO BE UNHEATED AND SUBJECT TO FREEZING. OTHER AREAS NOT LISTED MAY ALSO BE SUBJECT TO FREEZING TEMPERATURES. THE CONTRACTOR SHALL BE RESPONSIBLE FOR REVIEWING THE FULL SET OF DRAWINGS FOR THE PROJECT, INCLUDING ALL ARCHITECTURAL AND HVAC PLANS AND IDENTIFYING THESE ADDITIONAL AREAS.

1. STAIRWELLS
2. CORRIDORS
3. GARAGES
4. STORAGE ROOMS
5. ATTIC AREAS

SPRINKLER SYSTEM DESIGN CRITERIA FULL NFPA 13

AREA DESCRIPTION	HAZARD CLASS	SYSTEM TYPE	DENSITY (GPM/SF)	COVERAGE AREA	HOSE STREAM	SPRINKLER TEMP. RATING	KEY NOTES
RESIDENTIAL AREAS, CORRIDORS, AMENITIES AREAS, OFFICE AREAS, AND RESTAURANT SEATING AREAS.	LIGHT	WET NFPA 13	0.10	1500 SF	100 GPM	ORDINARY 155°F	(1)(4)(7)
ATTIC AREAS, PITCHED ROOF	LIGHT	DRY NFPA 13	0.10	2535 SF	100 GPM	INTERMEDIATE 200°F	(2)(3)
ATTIC AREAS, FLAT ROOF	LIGHT	DRY NFPA 13	0.10	1950 SF	100 GPM	INTERMEDIATE 200°F	(3)(6)
MECHANICAL ROOMS AND POOL EQUIPMENT ROOMS, AND RESTAURANT COOKING AREAS.	ORDINARY HAZARD GROUP 1	WET NFPA 13	0.15	1500 SF	250 GPM	INTERMEDIATE 200°F	(5)
PARKING GARAGES AND DRIVE-UNDER OVERHANGS.	ORDINARY HAZARD GROUP 1	DRY NFPA 13	0.15	1950 SF	250 GPM	INTERMEDIATE 200°F	(6)

GENERAL SPRINKLER SYSTEM NOTES:

A. PRIOR TO BEGINNING THE SPRINKLER SYSTEM DESIGN, THE SPRINKLER CONTRACTOR SHALL MEET WITH THE THE OWNER OR OWNER'S REPRESENTATIVE AND DISCUSS THE TYPE, COLOR, AND GENERAL LOCATIONS OF ALL SPRINKLER HEADS IN THE PROJECT. THE SPRINKLER CONTRACTOR'S DESIGN MUST REFLECT THE AGREED UPON SPRINKLER TYPES FOR ALL AREAS. A RECORD OF THIS MEETING SHALL BE AVAILABLE TO THE ENGINEER UPON REQUEST.

B. PRIOR TO THE MEETING BETWEEN THE OWNER AND THE SPRINKLER CONTRACTOR, SPRINKLER HEADS SHALL BE ASSUMED TO BE AS FOLLOWS UNLESS NOTED OTHERWISE ELSEWHERE:
   a. SPRINKLER HEADS SHALL BE CONCEALED TYPE (RECESSED WITH COVER PLATE), FAST RESPONSE SPRINKLERS IN ALL PUBLIC AREAS WITH A CEILING OF ANY TYPE, INCLUDING LAY-IN.
   b. SPRINKLER HEADS IN CEILING SERVING AREAS NOT VISIBLE TO THE PUBLIC MAY BE SEMI RECESSED OR CONCEALED TYPE.
   c. SPRINKLER HEADS SHALL BE UPRIGHT PENDANT, FAST RESPONSE SPRINKLERS IN ALL AREAS WITHOUT A CEILING.
   d. SIDE WALL SPRINKLER HEADS MAY NOT BE USED WHERE A CEILING CAVITY EXISTS THAT WILL ALLOW FOR THE INSTALLATION OF SPRINKLERS IN THE CEILING.
   e. SIDE WALL HEADS MAY ONLY BE USED INSIDE THE BUILDING IF THE PIPING FOR A SPRINKLER HEAD LOCATED ON THE CEILING WOULD BE EXPOSED TO A FREEZING CONDITION.
   f. IF SPRINKLER CONTRACTOR AND OWNER AGREE TO USING DIFFERENT HEAD TYPES FOR CERTAIN AREAS CONTRACTOR MUST INCLUDE LETTER FROM OWNER STATING THE CHANGE IS ACCEPTED PER THE PROVISIONS IN ITEM "A" ABOVE.

C. MULTI-STORY BUILDINGS EXCEEDING TWO STORIES IN HEIGHT SHALL HAVE A FLOOR CONTROL VALVE, CHECK VALVE, MAIN DRAIN VALVE, AND A FLOW SWITCH FOR ISOLATION, CONTROL, AND ANNUNCIATION OF WATER FLOW AT EACH LEVEL. IN A NON-HIGH RISE BUILDING, THE TOP FLOOR MAY BE SUPPLIED FROM THE CONTROL ASSEMBLY ON THE FLOOR BELOW. LIGHT HAZARD BUILDINGS WITH A TOTAL COMBINED FLOOR AREA OF LESS THAN 52,000 SQ. FT. ARE EXEMPT FROM THIS REQUIREMENT UNLESS REQUIRED BY THE LOCAL AHJ.

D. THE SPRINKLER CONTRACTOR SHALL MAKE A REASONABLE ATTEMPT TO DESIGN THE SPRINKLER SYSTEM TO WORK WITHOUT THE USE OF A FIRE PUMP BY USING LARGER PIPE SIZES, EFFICIENT PIPE ROUTING, DEVICES WITH LOW PRESSURE DROP CHARACTERISTICS, ETC. THE ENGINEER'S CALCULATIONS HAVE ASSUMED THAT THE AVERAGE PRESSURE LOSS ACROSS THE SYSTEM SHALL BE NO MORE THAN 0.02 PSI PER FT.

E. THE VELOCITY OF WATER IN THE SPRINKLER PIPING SYSTEM SHALL BE LIMITED TO 15 FEET PER SECOND OR LESS.

F. IF, AT THE TIME OF CONSTRUCTION, ONE OR MORE AREAS ARE NOT CLEARLY DEFINED, THE SPRINKLER DESIGN SHALL BE BASED ON THE HYDRAULICALLY MOST DEMANDING CRITERIA OF THE POSSIBLE CHOICES.

G. LISTED, EXTENDED HEADS, MAY BE USED WHERE APPROPRIATE ON THIS PROJECT.

H. SEE CIVIL SITE PLAN AND SPECIFICATIONS FOR BACKFLOW PREVENTOR REQUIREMENTS FOR THE FIRE PROTECTION WATER SERVICE UNLESS BACKFLOW PREVENTOR IS NOTED ON PLUMBING PLANS AS LOCATED INSIDE THE BUILDING..

I. SEE CIVIL OR OTHER AVAILABLE SITE DRAWINGS FOR LOCATION OF WATER MAIN TAP AND INFORMATION ON PUBLIC WATER MAIN CHARACTERISTICS.

J. ALL SPRINKLER COMPONENTS SHALL COMPLY WITH THE LISTING AND/OR PERFORMANCE REQUIREMENTS OF NFPA 13.

K. CPVC SPRINKLER PIPING MAY BE USED WHERE ALLOWED BY NFPA, THE LOCAL FIRE MARSHAL, AND THE LISTING DOCUMENTATION OF THE CPVC PIPING. USE OF CPVC PIPING MUST BE APPROVED BY THE OWNER PRIOR TO INSTALLATION.

L. THE CONTRACTOR MUST COMPLY WITH ALL LOCAL CODES, ORDINANCES, AND OTHER REQUIREMENTS FOR THE SPRINKLER SYSTEM DESIGN. THIS MAY INCLUDE PROVIDING SPRINKLERS FOR AREAS THAT ARE NOT INDICATED ABOVE.

M. ANY DEVIATIONS FROM THE REQUIREMENTS LISTED IN THIS SCHEDULE SHOULD BE CLEARLY MARKED ON THE SPRINKLER DRAWINGS WITH THE RELEVANT CODE SECTION ALLOWING THE DEVIATION NOTED.

N. NO WET SPRINKLER PIPING SHALL BE RUN IN A LOCATION SUBJECT TO FREEZING TEMPERATURES. THIS INCLUDES RUNNING PIPE ABOVE ISOLATED UNHEATED AREAS OF THE BUILDING, EVEN IF INSIDE THE INSULATED ENVELOPE OF THE BUILDING.

O. ALL SPRINKLER PIPING SHALL BE RUN TIGHT TO STRUCTURE ABOVE (OR INSIDE JOIST SPACE IF APPLICABLE) IN ORDER TO MAXIMIZE THE POTENTIAL FOR THE CEILING TO BE RAISED TO A HIGHER ELEVATION IN THE FUTURE WITH MINIMAL IMPACT TO THE SPRINKLER PIPING SYSTEM. ONLY PIPING FOR INDIVIDUAL SPRINKLER HEADS MAY BE DROPPED TO THE CEILING ELEVATION IN AREAS WITH LARGE ABOVE CEILING CAVITIES UNLESS DIRECTED OTHERWISE IN WRITING BY THE OWNER, ARCHITECT, OR PLUMBING ENGINEER.

SPRINKLER SYSTEM KEY NOTES:

(1) PROVIDE DRY PENDANT OR SIDEWALL, FAST RESPONSE SPRINKLERS AT ALL BALCONIES, PORCHES, OUTDOOR CORRIDORS, UNHEATED STORAGE ROOMS, UNHEATED ELECTRICAL ROOMS, AND BELOW ALL EXTERIOR OVERHANGS, ROOFS, OR CANOPIES EXCEEDING 4 FEET IN WIDTH.

(2) COVERAGE AREA HAS BEEN INCREASED 30% FOR DRY PIPE SYSTEM AND INCREASED 30% FOR PITCHED ROOF EXCEEDING 2 IN 12.

(3) SPRINKLERS IN ATTIC SHALL BE QUICK RESPONSE TYPE LISTED FOR DRY PIPE SYSTEMS.

(4) RESIDENTIAL AREAS SHALL COMPLY WITH NFPA 13 NOT NFPA 13R.

(5) SPRINKLERS LOCATED IN ROOMS WITH INDOOR SWIMMING POOLS, HOT TUBS, POOL EQUIPMENT, OR HAVING POOL CHEMICAL STORAGE, SHALL BE PROTECTED AGAINST CORROSION.

(6) COVERAGE AREA HAS BEEN INCREASED BY 30% FOR A DRY PIPE SYSTEM.

(7) SPRINKLER HEADS SHALL HAVE A TEMPERATURE RATING OF 175°F WHEN PROVIDED IN APARTMENT HVAC CLOSETS OR IN CLOSETS WITH STACKED WASHERS AND DRYERS.

STANDPIPE NOTES

ALL BUILDINGS FOUR STORIES OR MORE IN HEIGHT SHALL BE PROVIDED WITH STANDPIPE SYSTEMS MEETING THE FOLLOWING REQUIREMENTS:

1. CONTRACTOR SHALL PROVIDE STANDPIPES IN ALL STAIRS AND OTHER LOCATIONS AS INDICATED ON PLANS.
2. CONSULT ARCHITECTURAL DRAWINGS FOR EXACT LOCATIONS OF ALL STANDPIPES.
3. STANDPIPES LOCATED IN STAIRWELLS SHALL BE ON INTERMEDIATE OR MAIN LANDINGS AS DIRECTED BY THE LOCAL AUTHORITY HAVING JURISDICTION.
4. ALL STANDPIPE SYSTEMS MUST COMPLY WITH THE REQUIREMENTS OF NFPA 14.
5. STANDPIPE HOSE VALVES SHALL BE MOUNTED BETWEEN 36" AND 48" ABOVE THE FINISHED FLOOR.
6. WET STANDPIPE SYSTEMS MAY BE USED AS COMBINATION STANDPIPES TO SUPPLY WATER TO THE BUILDING FIRE SPRINKLER SYSTEM.
7. STANDPIPES LOCATED IN UNHEATED AREAS SHALL BE DRY STANDPIPES.
8. UNLESS LOCATED IN A HIGH-RISE, STANDPIPES IN HEATED AREAS SHALL BE CONSIDERED MANUAL WET, MEETING THE FOLLOWING FROM NFPA 14:

   A MANUAL WET STANDPIPE SYSTEM SHALL BE A WET STANDPIPE SYSTEM THAT MAY SHARE A WATER SUPPLY WITH AN AUTOMATIC SPRINKLER SYSTEM. THIS WATER SUPPLY IS CAPABLE OF DELIVERING THE FLOW AND PRESSURE DEMANDS OF THE SPRINKLER SYSTEM BUT IS NOT CAPABLE OF DELIVERING THE STANDPIPE SYSTEM DEMANDS WITHOUT ADDITIONAL PRESSURE SUPPLIED BY A FIRE DEPARTMENT PUMPER TRUCK.

9. STANDPIPES IN HIGH RISE BUILDINGS SHALL BE AUTOMATIC STANDPIPES WITH AN OUTLET PRESSURE OF 100 PSI ON THE TOP FLOOR.

FLOW TEST DATA

UPON AWARDING OF CONTRACT THE FIRE PROTECTION CONTRACTOR SHALL PERFORM A FLOW TEST ON THE TWO HYDRANTS NEAREST THE SITE AND FORWARD THE DATA TO THE ENGINEER AND ARCHITECT.

PROVIDER OF TEST	AUTHORIZED REPRESENTATIVE OF THE CITY OF ATLANTA
DATE OF TEST	9/10/2020
TIME OF DAY OF TEST	10:40AM
LOCATION OF FLOW HYDRANT	1330 FAIRMONT AVENUE
ELEVATION OF HYDRANT	-
STATIC PRESSURE	134
RESIDUAL PRESSURE	108
FLOW	1190 GPM

SPRINKLER SYSTEM DESIGN CRITERIA NFPA 13R

AREA DESCRIPTION	HAZARD CLASS	SYSTEM TYPE	DENSITY (GPM/SF)	COVERAGE AREA	HOSE STREAM	SPRINKLER TEMP. RATING	KEY NOTES
AMENITIES AREAS, OFFICE AREAS, AND SEATING AREAS.	LIGHT	WET NFPA 13	0.10	1500 SF	100 GPM	ORDINARY 155°F	(1)
RESIDENTIAL UNITS AND CORRIDORS.	LIGHT	WET NFPA 13R	0.05	4 MOST REMOTE HEADS	-	ORDINARY 155°F	(3)
MECHANICAL ROOMS AND POOL EQUIPMENT ROOMS.	ORDINARY HAZARD GROUP 1	WET NFPA 13	0.15	1500 SF	250 GPM	INTERMEDIATE 200°F	(2)

GENERAL SPRINKLER SYSTEM NOTES:

A. PRIOR TO BEGINNING THE SPRINKLER SYSTEM DESIGN, THE SPRINKLER CONTRACTOR SHALL MEET WITH THE THE OWNER OR OWNER'S REPRESENTATIVE AND DISCUSS THE TYPE, COLOR, AND GENERAL LOCATIONS OF ALL SPRINKLER HEADS IN THE PROJECT. THE SPRINKLER CONTRACTOR'S DESIGN MUST REFLECT THE AGREED UPON SPRINKLER TYPES FOR ALL AREAS. A RECORD OF THIS MEETING SHALL BE AVAILABLE TO THE ENGINEER UPON REQUEST.

B. PRIOR TO THE MEETING BETWEEN THE OWNER AND THE SPRINKLER CONTRACTOR, SPRINKLER HEADS SHALL BE ASSUMED TO BE AS FOLLOWS UNLESS NOTED OTHERWISE ELSEWHERE:
   a. SPRINKLER HEADS SHALL BE CONCEALED TYPE (RECESSED WITH COVER PLATE), FAST RESPONSE SPRINKLERS IN ALL PUBLIC AREAS WITH A CEILING OF ANY TYPE, INCLUDING LAY-IN.
   b. SPRINKLER HEADS IN CEILING SERVING AREAS NOT VISIBLE TO THE PUBLIC MAY BE SEMI RECESSED OR CONCEALED TYPE.
   c. SPRINKLER HEADS SHALL BE UPRIGHT PENDANT, FAST RESPONSE SPRINKLERS IN ALL AREAS WITHOUT A CEILING.
   d. SIDE WALL SPRINKLER HEADS MAY NOT BE USED WHERE A CEILING CAVITY EXISTS THAT WILL ALLOW FOR THE INSTALLATION OF SPRINKLERS IN THE CEILING.
   e. SIDE WALL HEADS MAY ONLY BE USED INSIDE THE BUILDING IF THE PIPING FOR A SPRINKLER HEAD LOCATED ON THE CEILING WOULD BE EXPOSED TO A FREEZING CONDITION.
   f. IF SPRINKLER CONTRACTOR AND OWNER AGREE TO USING DIFFERENT HEAD TYPES FOR CERTAIN AREAS CONTRACTOR MUST INCLUDE LETTER FROM OWNER STATING THE CHANGE IS ACCEPTED PER THE PROVISIONS IN ITEM "A" ABOVE.

C. THE SPRINKLER CONTRACTOR SHALL MAKE A REASONABLE ATTEMPT TO DESIGN THE SPRINKLER SYSTEM TO WORK WITHOUT THE USE OF A FIRE PUMP BY USING LARGER PIPE SIZES, EFFICIENT PIPE ROUTING, DEVICES WITH LOW PRESSURE DROP CHARACTERISTICS, ETC. THE ENGINEER'S CALCULATIONS HAVE ASSUMED THAT THE AVERAGE PRESSURE LOSS ACROSS THE SYSTEM SHALL BE NO MORE THAN 0.02 PSI PER FT.

D. THE VELOCITY OF WATER IN THE SPRINKLER PIPING SYSTEM SHALL BE LIMITED TO 15 FEET PER SECOND OR LESS.

E. IF, AT THE TIME OF CONSTRUCTION, ONE OR MORE AREAS ARE NOT CLEARLY DEFINED, THE SPRINKLER DESIGN SHALL BE BASED ON THE HYDRAULICALLY MOST DEMANDING CRITERIA OF THE POSSIBLE CHOICES.

F. LISTED, EXTENDED HEADS, MAY BE USED WHERE APPROPRIATE ON THIS PROJECT.

G. SEE CIVIL SITE PLAN AND SPECIFICATIONS FOR BACKFLOW PREVENTOR REQUIREMENTS FOR THE FIRE PROTECTION WATER SERVICE UNLESS BACKFLOW PREVENTOR IS NOTED ON PLUMBING PLANS AS LOCATED INSIDE THE BUILDING..

H. SEE CIVIL OR OTHER AVAILABLE SITE DRAWINGS FOR LOCATION OF WATER MAIN TAP AND INFORMATION ON PUBLIC WATER MAIN CHARACTERISTICS.

I. ALL SPRINKLER COMPONENTS SHALL COMPLY WITH THE LISTING AND/OR PERFORMANCE REQUIREMENTS OF NFPA 13 AND NFPA 13R.

J. CPVC SPRINKLER PIPING MAY BE USED WHERE ALLOWED BY NFPA, THE LOCAL FIRE MARSHAL, AND THE LISTING DOCUMENTATION OF THE CPVC PIPING. USE OF CPVC PIPING MUST BE APPROVED BY THE OWNER PRIOR TO INSTALLATION.

K. THE CONTRACTOR MUST COMPLY WITH ALL LOCAL CODES, ORDINANCES, AND OTHER REQUIREMENTS FOR THE SPRINKLER SYSTEM DESIGN. THIS MAY INCLUDE PROVIDING SPRINKLERS FOR AREAS THAT ARE NOT INDICATED ABOVE.

L. ANY DEVIATIONS FROM THE REQUIREMENTS LISTED IN THIS SCHEDULE SHOULD BE CLEARLY MARKED ON THE SPRINKLER DRAWINGS WITH THE RELEVANT CODE SECTION ALLOWING THE DEVIATION NOTED.

M. NO WET SPRINKLER PIPING SHALL BE RUN IN A LOCATION SUBJECT TO FREEZING TEMPERATURES. THIS INCLUDES RUNNING PIPE ABOVE ISOLATED UNHEATED AREAS OF THE BUILDING, EVEN IF INSIDE THE INSULATED ENVELOPE OF THE BUILDING.

N. ALL SPRINKLER PIPING SHALL BE RUN TIGHT TO STRUCTURE ABOVE (OR INSIDE JOIST SPACE IF APPLICABLE) IN ORDER TO MAXIMIZE THE POTENTIAL FOR THE CEILING TO BE RAISED TO A HIGHER ELEVATION IN THE FUTURE WITH MINIMAL IMPACT TO THE SPRINKLER PIPING SYSTEM. ONLY PIPING FOR INDIVIDUAL SPRINKLER HEADS MAY BE DROPPED TO THE CEILING ELEVATION IN AREAS WITH LARGE ABOVE CEILING CAVITIES UNLESS DIRECTED OTHERWISE IN WRITING BY THE OWNER, ARCHITECT, OR PLUMBING ENGINEER.

SPRINKLER SYSTEM KEY NOTES:

(1) PROVIDE DRY PENDANT OR SIDEWALL, FAST RESPONSE SPRINKLERS AT ALL BALCONIES, PORCHES, OUTDOOR CORRIDORS, UNHEATED STORAGE ROOMS, UNHEATED ELECTRICAL ROOMS, AND BELOW ALL EXTERIOR OVERHANGS, ROOFS, OR CANOPIES EXCEEDING 4 FEET IN WIDTH.

(2) SPRINKLERS LOCATED IN ROOMS WITH INDOOR SWIMMING POOLS, HOT TUBS, POOL EQUIPMENT, OR HAVING POOL CHEMICAL STORAGE, SHALL BE PROTECTED AGAINST CORROSION.

(3) SPRINKLER HEADS SHALL HAVE A TEMPERATURE RATING OF 175°F WHEN PROVIDED IN APARTMENT HVAC CLOSETS OR IN CLOSETS WITH STACKED WASHERS AND DRYERS.

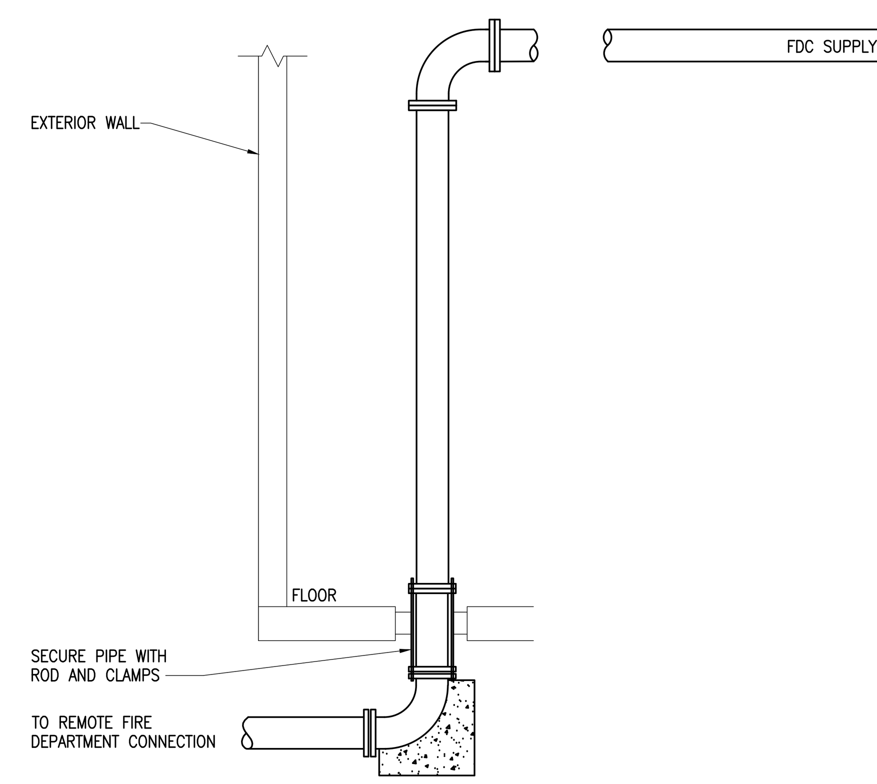

NOTE:
1. SEE ARCHITECTURAL ELEVATIONS FOR ACTUAL MOUNTING HEIGHTS AND LOCATIONS FOR FIRE DEPARTMENT CONNECTION.

2 FIRE PROTECTION SERVICE ENTRANCE
NO SCALE

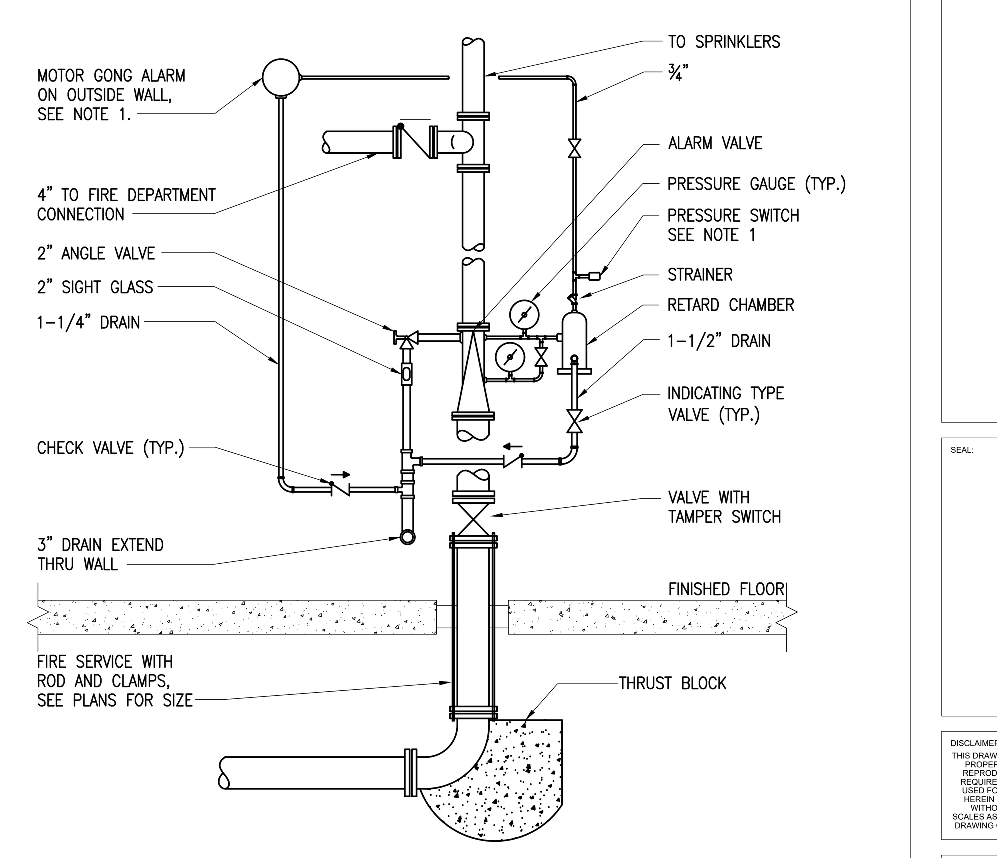

NOTES:
1. PRESSURE SWITCH IS FOR CONNECTION TO FIRE ALARM SYSTEM OR REMOTE ALARM. THE MOTOR GONG (INCLUDING DRAIN PIPE FROM GONG AND PIPE ABOVE PRESSURE SWITCH) IS NOT REQUIRED (UNLESS REQUIRED BY AHJ) WHEN SPRINKLER SYSTEM IS BEING MONITORED BY THE BUILDINGS FIRE ALARM SYSTEM.
2. ALL INDICATING VALVES SHALL BE SUPERVISED BY A TAMPER SWITCH CONNECTED TO THE FIRE ALARM SYSTEM AND BY LOCKING OPEN. PROVIDE TAMPER SWITCH AT EVERY FLOOR CONTROL VALVE AS INDICATED BY LOCAL JURISDICTION HAVING AUTHORITY. COORDINATE WITH ELECTRICAL CONTRACTOR PRIOR TO PRICING. NO CHANGE ORDER WILL BE ALLOWED AFTER BID FOR CONNECTION TO FIRE SYSTEM.

1 FIRE SPRINKLER RISER DETAIL
NO SCALE

dwell design studio
1280 HIGHTOWER TRAIL
ATLANTA, GA 30350
PHONE: 770.864.1035
dwelldesignstudio.com

Phillips Gradick Engineering, P.C.
500 Sugar Mill Road
Building A, Suite 105
Atlanta, GA 30350
Telephone: 770.650.9061
Fax: 770.642.2410
PGE # 220015

This drawing, as an instrument of service is and shall remain the property of the Phillips Gradick Engineering, P.C. and shall not be reproduced, published or used in any way without the permission of Phillips Gradick Engineering, P.C.. This Drawing is copyrighted and protected under section 120 of the U.S. Copyright Act USC. The protection includes but is not limited to design and construction techniques. Unauthorized use of these plans without the express written permission of Phillips Gradick Engineering, P.C. is prohibited.

NOVEL WEST MIDTOWN

1330 FAIRMONT AVENUE
ATLANTA, GA 30318

A DEVELOPMENT FOR:
CRESCENT COMMUNITIES

ISSUE

DATE	DESCRIPTION	INCLUDED
06/08/2020	PROGRESS SET	
06/29/2020	SCHEMATIC DESIGN	
08/18/2020	DESIGN DEVELOPMENT	X
09/29/2020	50% CONSTRUCTION DOCUMENT	X

REVISION

DATE	DESCRIPTION	REV

SEAL:

DISCLAIMER:
THIS DRAWING AND ASSOCIATED DOCUMENTS ARE THE EXCLUSIVE PROPERTY OF DWELL DESIGN STUDIO, AND ARE NOT TO BE REPRODUCED OR COPIED IN WHOLE OR IN PART, EXCEPT AS REQUIRED FOR THE STATED PROJECT. THEY ARE ONLY TO BE USED FOR THIS PROJECT AND SITE SPECIFICALLY IDENTIFIED HEREIN AND ARE NOT TO BE USED ON ANY OTHER PROJECT WITHOUT WRITTEN CONSENT OF DWELL DESIGN STUDIO. SCALES AS NOTED ON THIS DRAWING ARE VALID ON THE ORIGINAL DRAWING ONLY, THE DIMENSIONS OF WHICH ARE 30 x 42 INCHES.

SHEET NAME:
FIRE PROTECTION
DESIGN DEVELOPMENT PACKAGE

JOB NUMBER: 195616

DRAWN BY CAT
CHECKED BY CDF

FP0-01

C dwell design studio - ALL RIGHTS RESERVED